# Series 68
## Rollerpleat System

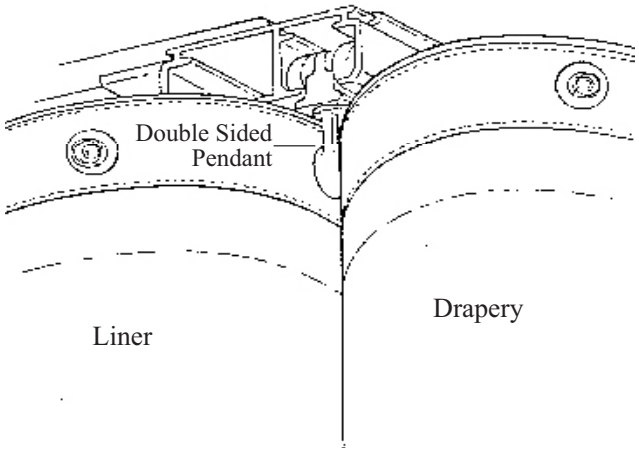


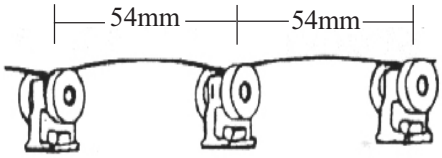


100% Roller Carrier Dimensions
No 68382

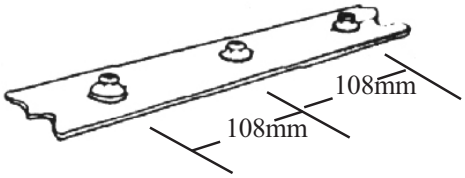


Snap Tape Dimen-
sions

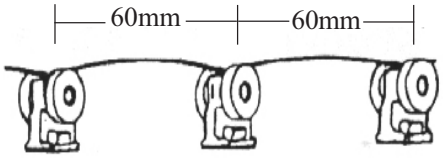


80% Roller Carrier Dimensions
No 68381

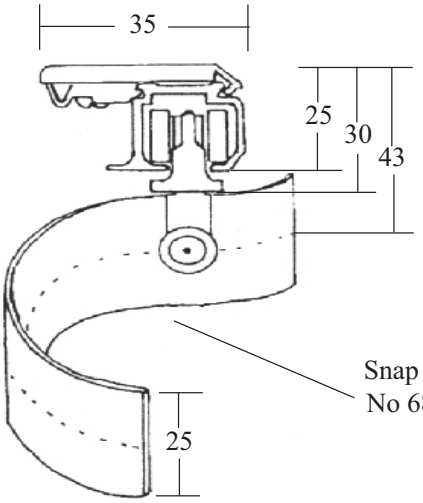


Small Ceiling Bracket
No5253S

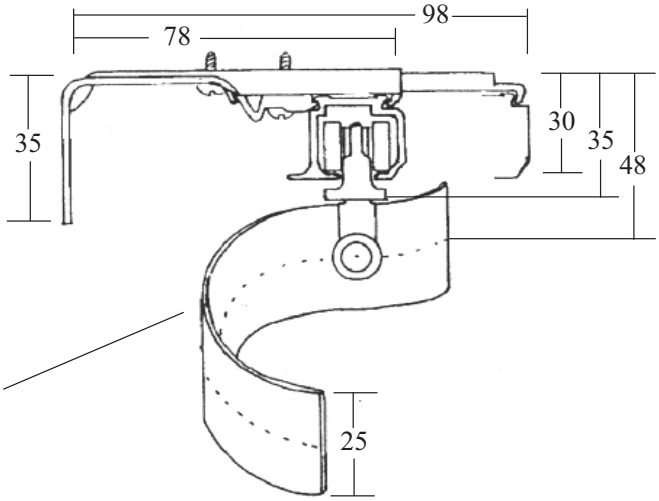


Single Centre Support Bracket
No 5255

Snap Tape
No 68463

* Tip : Min Proj For Reverse Bends ( 95mm Wall To Front Of Track )